8737 AL Hwy 51
Opelika, AL 36804
Ph: (334)826-9538
Fax: (334)826-9539

Trane

BAYCURB050A
Horizontal Discharge
4TCC3018-036, 4TCY4024-036, 4YCC3018-036, 4YCY4018-036, 4YCZ6036A, 4WCC3018-036, 4WCY4024-036, 4DCY024-036, 4DCZ6018-036,4WCZ6036A

Project Name:_____

Delivery Zip Code:_____

Standard Features

- ☐ Welded 18ga G90 galvanized steel construction
- ☐ Factory installed PT 1x4 wood nailer
- ☐ Supplied 1-1/2x1/4" closed cell neoprene gasket
- ☐ Insulated with 1"x1.5" density duct liner

Options (please check):

- ☐ Heavier gauge metal
- ☐ 5052-H32 AL or 304 SS construction
- ☐ Turning vane
- ☐ 1" or 2" isolation rails
- ☐ Seismic rating/stamp
- ☐ Wind rating/stamp
- ☐ Filtration
- ☐ Metal Building construction
- ☐ Other per customer specs

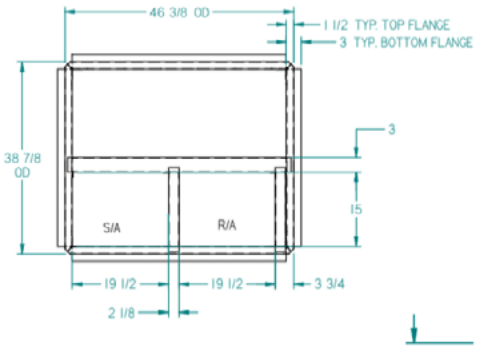

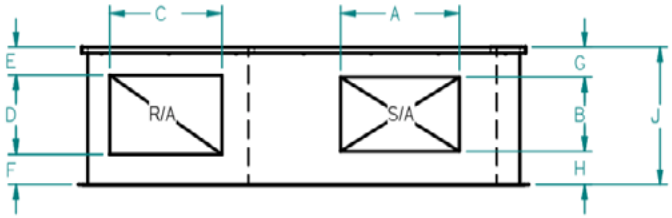

QTY	A	B	C	D	E	F	G	H	J	Tag