JCI

SELECT JV40
40 TON HD

8737 AL Hwy 51
Opelika, AL 36804
Ph: (334)826-9538
Fax: (334)826-9539

Project Name:_____

Delivery Zip Code:_____

Standard Features

- ☐ Welded SB 14ga G90 galvanized steel construction
- ☐ Height determined by duct size
- ☐ Factory installed PT 1x4 wood nailer
- ☐ Supplied 1-1/2x1/4" closed cell neoprene gasket
- ☐ 1"x1.5# insulation
- ☐ 3" Duct collar with P.T. 2x2 wood nailer

Options (please check):

- ☐ Heavier gauge metal
- ☐ 5052-H32 AL or 304 SS construction
- ☐ Turning vane
- ☐ 1" or 2" isolation rails
- ☐ Custom slope
- ☐ Seismic rating/stamped
- ☐ Filtration
- ☐ Metal Building construction
- ☐ Other per customer specs

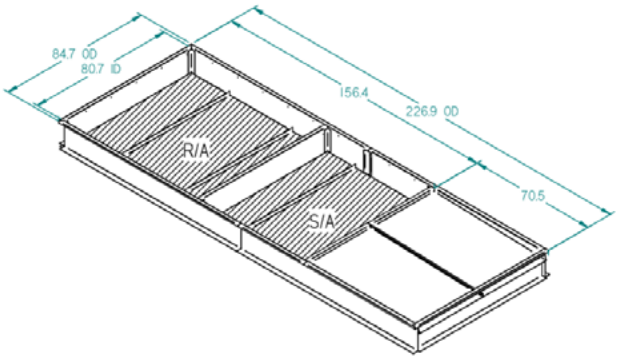

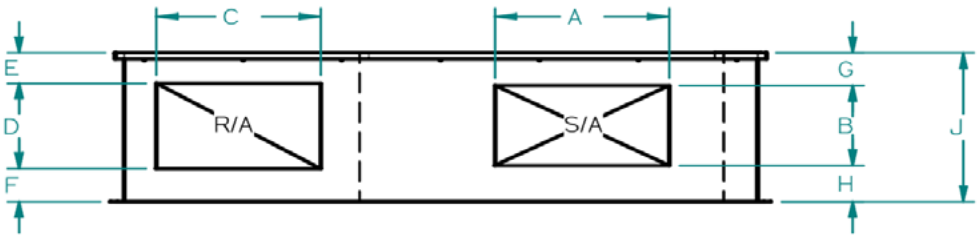

QTY	A	B	C	D	E	F	G	H	J	Tag