8737 AL Hwy 51
Opelika, AL 36804
Ph: (334)826-9538
Fax: (334)826-9539

Trane

BAYCURB051A
Horizontal Discharge
4TCC3042-060, 4TCY4042-60, 4YCC3042-060, 4YCY4042-060, 4YCZ6048-060A, 4WCC3042-060, 4WCY4042-060, 4DCY042-060, 4DCZ6042-060, 4WCZ6048-060A

Project Name:_____

Delivery Zip Code:_____

Standard Features

- ☐ Welded 18ga G90 galvanized steel construction
- ☐ Factory installed PT 1x4 wood nailer
- ☐ Supplied 1-1/2x1/4" closed cell neoprene gasket
- ☐ Insulated with 1"x1.5" density duct liner

Options (please check):

- ☐ Heavier gauge metal
- ☐ 5052-H32 AL or 304 SS construction
- ☐ Turning vane
- ☐ 1" or 2" isolation rails
- ☐ Seismic rating/stamp
- ☐ Wind rating/stamp
- ☐ Filtration
- ☐ Metal Building construction
- ☐ Other per customer specs

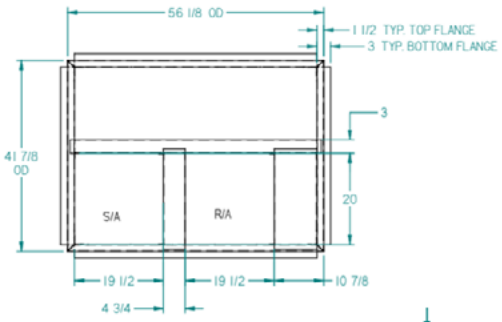

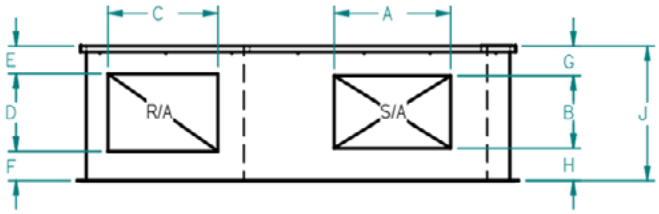

QTY	A	B	C	D	E	F	G	H	J	Tag